First year report

Flexible reliable timing constraints (9905-1)[1]

Gerhard Fohler
Mälardalen University
Box 883, 721 23 Västeras
gerhard.fohler@mdh.se

Industrial Partner:
MECEL AB [2]

International Partner:
Prof Krithi Ramamritham
University of Massachusetts/ IIT Bombay

Project summary

Predictability and flexibility have often been considered as contradicting requirements, in particular from the scheduling perspective. This strong exclusion, however, holds only for predictability on a very detailed level, which is not demanded in most scenarios. Our research identifies appropriate levels of predictability, extends algorithms and architectures to combine static and dynamic components, and enables designers to combine predictability and flexibility.

Real-time systems need to be reliable in order to be applicable in real-world environment. Our approach to reliability follows the lines of timeliness: Instead of providing for static solutions only, we provide for adaptive fault tolerance and self-evolving systems. Issues include scheduling, dynamic reconfigurations of hardware structures, and reliability measures

In this project, we develop methods for the derivation, specification, and run-time execution of activities with timing constraints, which exploit inherent flexibility in temporal demands, e.g., on application level, instead of over constraining specifications. We propose to use flexible timing constraints, which express feasibility information of activities rather than numbers demanded by common system models and scheduling algorithms. These will be scheduled by novel offline algorithms, which are capable of exploiting the expressed flexibility, while maintaining reliability requirements .

Changes from original proposal

Department duties for Damir Isovic have changed to 50%

Mikael Stromberg has left Mecel AB. We have started new contacts with Rolls Royce of UK, aircraft engine controller and TTTech, Austria (automotive) to complement the projects, who have expressed interest, but have not been fully involved yet. We have delayed the corresponding application studies accordingly, concentrated on the other areas, and carried out scheduling issues earlier, as depicted in the time plan figure.

We have already started with tool support.

Damir has carried out research on real-time requirements of software components as prestudy on requirements on flexible timing constraints.

---

[1] Note: this report refers to the first project with Damir Isovic, the first year report on the extension project with Radu Dobrin, is due later

[2] The extension of project includes Rolls Royce of UK.

Time plan

Here is the original time plan. See the project proposal for the explanation of individual steps (A1, A2, B1…). The colored boxes indicate fulfilled steps.

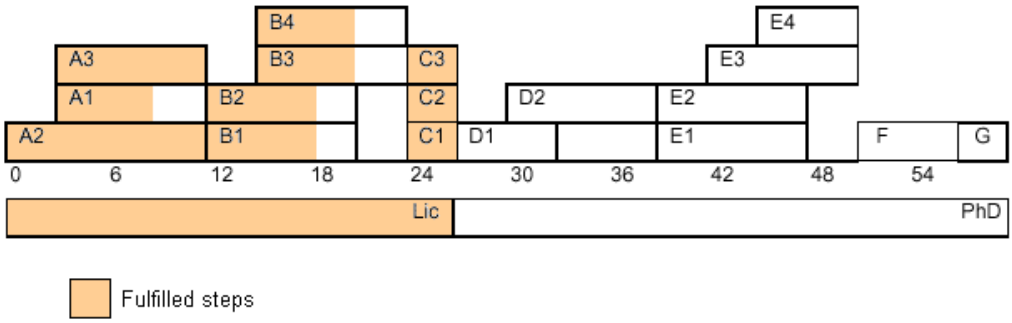

We have carried out actions C earlier to compensate for the delay in A1 and B, due to shift in focus of industrial partner. The main goal, the licentiate thesis has been completed ahead of time.

Achievements up to now

Licentiate thesis

Ph D student Damir Isovic has finished his licentiate thesis entitled "*Handling Sporadic Tasks in Real-Time Systems – Combined Offline and Online Approach*". The thesis has been presented on June 8th, 2001, in Västerås. The opponent was Jakob Axelsson from Carlstedt Research & Technology, Göteborg.

Publications

1. Damir Isovic, Gerhard Fohler: *Efficient Scheduling of Sporadic, Aperiodic, and Periodic Tasks with Complex Constraints*, *Proc. of the 21st IEEE Real-Time Systems Symposium*, Walt Disney World, Orlando, Florida, USA, November 2000.

2. Damir Isovic, Gerhard Fohler: *Online Handling of Firm Aperiodic Tasks in Time Triggered Systems*, *Work-in-Progress Session, 12th EUROMICRO Conference on Real-Time Systems*, Stockholm, Sweden, June 2000.

3. Damir Isovic, Gerhard Fohler: *Handling Sporadic Tasks in Off-line Scheduled Distributed Real-Time Systems*, *11th EUROMICRO Conference on Real-Time Systems*, York, England, July 1999.

4. Damir Isovic, Markus Lindgren, Ivica Crnkovic: *System Development with Real-Time Components*, *Proc. of ECOOP2000 Workshop 22 - Pervasive Component-based systems*, Sophia Antipolis and Cannes, France, June 2000.

5. Gerhard Fohler, Damir Isovic, Tomas Lennvall, Roger Vuolle: *SALSART - A Web Based Cooperative Environment for Offline Real-time Schedule Design*, Technical Report , June 2001.

6. Damir Isovic, Gerhard Fohler: *Simulation Analysis of Sporadic and Aperiodic Task Handling*, Technical Report , May 2001.

7. Damir Isovic, Markus Lindgren: *Real-Time Components*, Technical Report , Mälardalen Real-Time Research Centre, Mälardalen University, March 2000.

The SALSART tool suite

As a part of the project, we have developed the SALSART tool-suite for distributed schedule design and analysis to support our research.

SALSART is a web-based cooperative environment for the design of real-time schedules. It comprises a set of stand alone tools interacting via an internet based central supervisor. It envisions a set of experts working as geographically separated team on application specification, scheduling, editing, simulation and analysis of real-time schedules.

Acknowledging the complexity of the scheduling problem and engineering constraints will prevent ``one shot'' solutions satisfying all demands, the tool suite supports the editing, modification, and cooperative rescheduling and redesign of solution, as well as the simulations. These steps can be performed in isolation, or rather in an interactive way, providing for web-based communication and graphical redesign within the team.

The *SALSART* interactive tools are implemented in JAVA for platform independence and using XML for interfacing. Thus, it is able to be applied on a variety of systems and provides for configurable application demands.

Industrial cooperation

Mikael Stromberg has left Mecel AB. We have started new contacts with Rolls Royce of UK, aircraft engine controller and TTTech, Austria (automotive) to complement the projects, who have expressed interest (see support letters extension project), but have not been fully involved yet.
We have delayed the corresponding application studies accordingly.
To this point, we have concentrated on studying the characteristics of the other specified areas, control and inherent real-time properties. We have worked on the control part with external PhD student Pau Mari from UPC Barcelona.
In autumn, we will have a meeting with Rolls Royce together with Radu Dobrin

Future plans

We will continue as originally planned, adjusting for more application characteristics studies in the second half of the project. Furthermore, we will include new input from the extension project with Radu Dobrin and Rolls Royce.

We are considering to look into using the proposed flexible timing constraints for MPEG video streams. A ongoing master's thesis looks into the actual real-time constraints of real MPEG streams.